G-2430-LM22

Lauren Collection

Wall-Mounted Lavatory Faucet (Rough and Trim)

Product Features

- Installs on 8" centers
- Aerated flow rate ~ 2.2 gpm @ 60 psi
- 7-1/16" spout reach
- Drain assembly not included

Available Finishes

- Polished Chrome G-2430-LM22-PC
- Steelnox G-2430-LM22-SN
- Olive Bronze G-2430-LM22-OB
- Polished Nickel G-2430-LM22-PN
- *18K Gold G-2430-LM22-AU

Code Compliance

- ADA

Optional Accessories

- Decorative trap G-9970-**
- Water-saving aerator G-9300

Warranty

- Limited lifetime warranty

For complete warranty information go to www.graff-faucets.com/en-nam/warranty

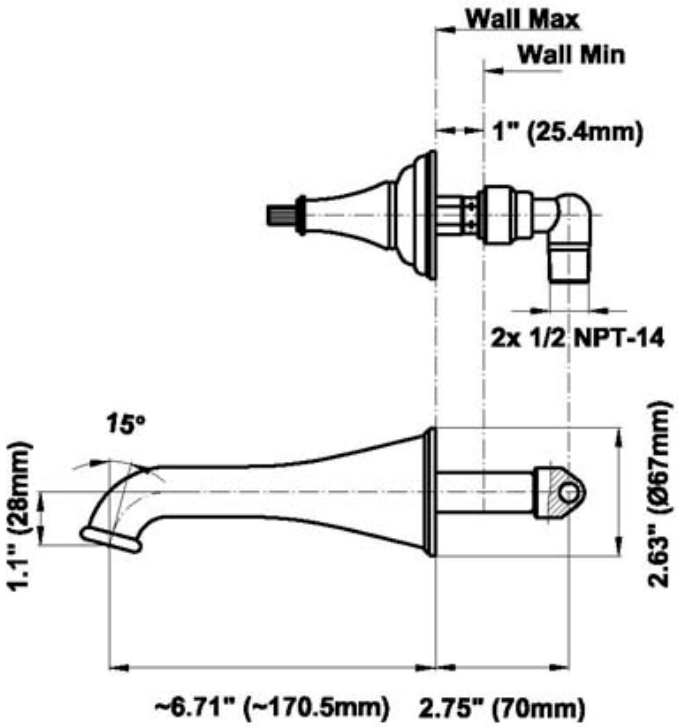

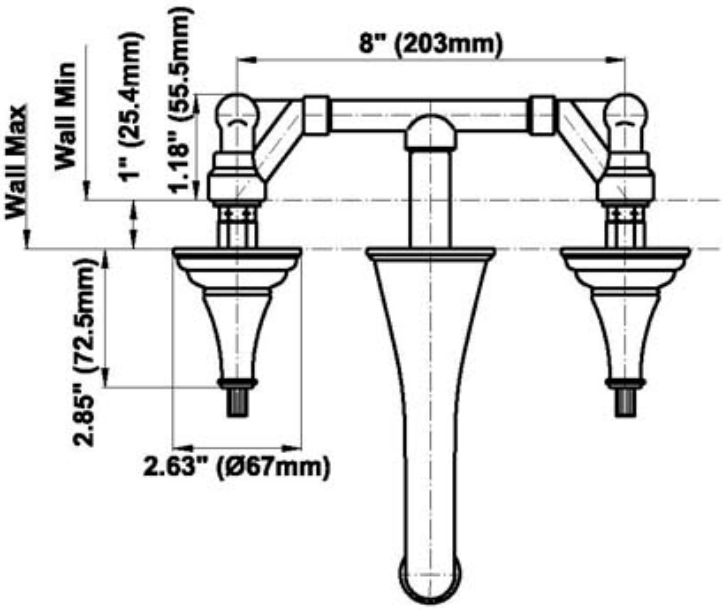

The measurements shown are for reference only. Products and specifications shown are subject to change without notice. Revised 07/2012.

www.graff-faucets.com | phone: 800-954-4723